KML WINDOWS INC.
an Andersen® company

WOODWRIGHT ARCHTOP DOUBLE HUNG

1- HALLMARK CERTIFICATION TEST SPECIMEN: WWDH-1

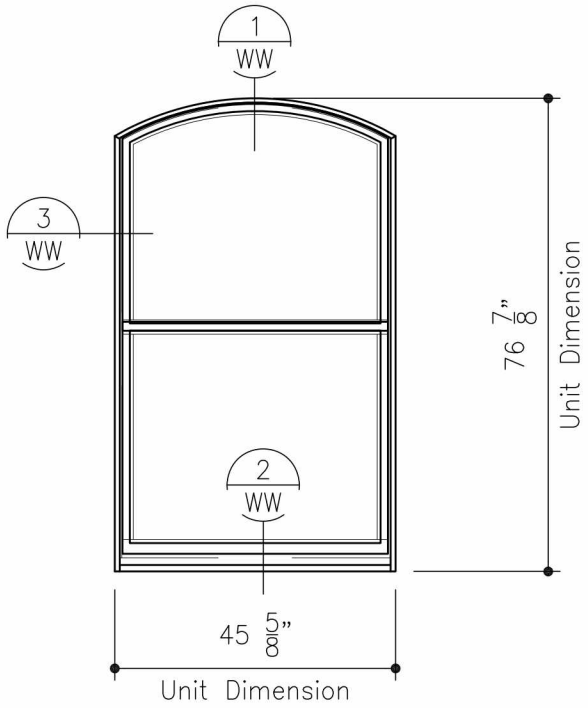

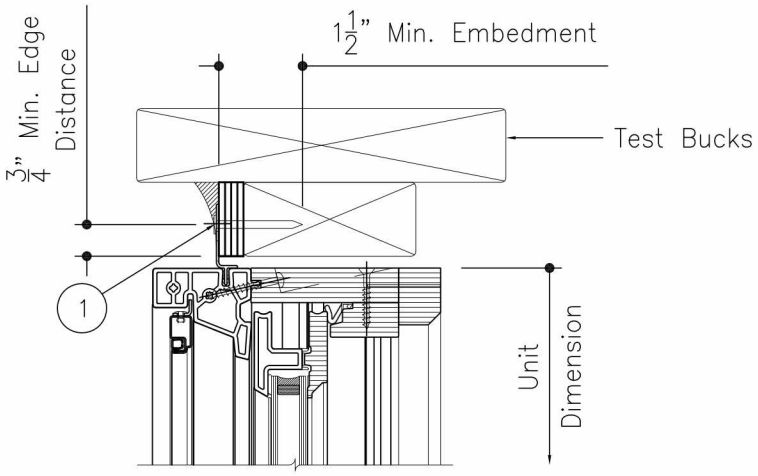

HEAD DETAIL (1 / WW)

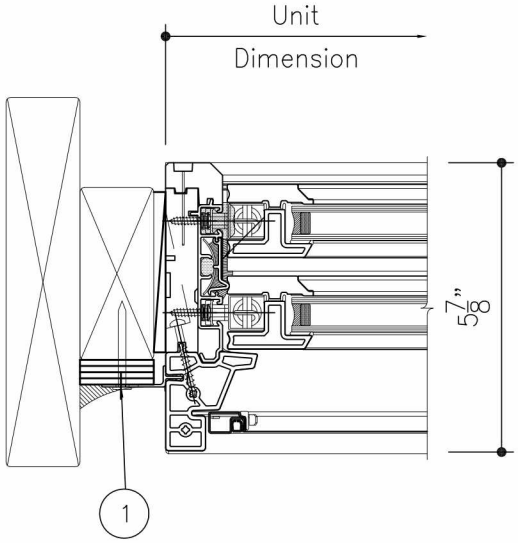

JAMB DETAIL (3 / WW)

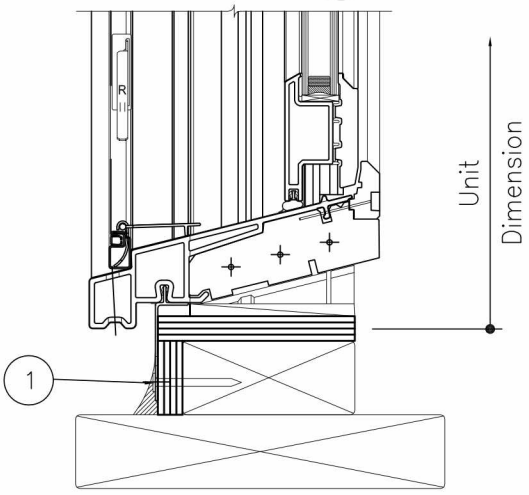

SILL DETAIL (2 / WW)

(1) 1 3/4" Roofing Nails @ every second hole through nail fin (4" from ends & 6" O.C.).

3/4" Minimum edge distance required.

1 1/2" Minimum embedment required.